Allied Vision

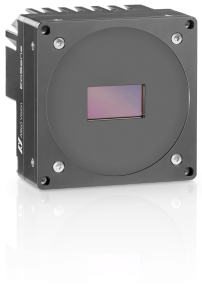

EoSens CoaXPress-12

EoSens9.5MCX12-FF

General

Model	EoSens9.5MCX12-FF
Product code	F006220
Product series	EoSens CoaXPress-12
Status	Available

Sensor

Sensor type	Area scan
Chroma	Mono
Spectrum	Visible
Spectral range	380 nm to 1000 nm
Resolution	4,096 × 2,304 (9.50 MP)
Sensor model	Luxima LUX9506
Sensor architecture (material)	cmos
Shutter type(s)	Global shutter (GS)
Sensor size	26.62 × 14.98 mm (30.55 mm, Type 2)
Pixel size	6.50 µm × 6.50 µm

Pixel formats

Sensor bit depth	8-bit, 10-bit, 12-bit
Monochrome pixel formats	mono8, mono10, mono12

Timing and gain

Max. frame rate	503 fps
Max. frame rate ROI modes	4096 x 2304 | 503 fps, 1920 x 1080 | 2243 fps, 1280 x 720 | 4898 fps, 640 x 480 | 13498 fps, 4096 x 100 | 11039 fps, 512 x 512 | 15767 fps, 512 x 8 | 225000 fps,
Exposure time	2 µs to 40.00 ms

Timing and gain

Gain	0.0 dB to 12.0 dB

I/Os and power

Non-isolated lines	1 x LVDS input, 1 x LVDS output, 0 x TTL input, 0 x TTL output, 2 x 24V input, 2 x Open drain output,
Specific non-isolated lines	1 x RS232 input, 1 x RS232 output, 0 x RS422 input, 0 x RS422 output,
Opto-isolated lines	0 x Optical isolated input, 0 x Optical isolated input,
I/O connector	12-pin Hirose HR10A-10P-12S
Power supply	Power over CoaXPress only
Power consumption	21 W (typical)

Operating conditions

Operating temperature	-10 °C to 60 °C (housing)

Mechanical properties

Body dimensions (L x W x H in mm)	49 × 80 × 80
IP class	IP30
Lens mount(s)	Flat Front
Weight	630 g

Interfaces

Digital interface	cxp-12 with 4 connections
Interface connector	(micro-BNC)
Vision standard	CoaXPress 2.0

FW features - image control

Exposure modes	external
Gain modes	digital, analog
Image control features	roi, mirror-image, dpc, shading-correction

FW features - camera control

Trigger modes/sync	external, trigger-over-cxp

Quantum Efficiency

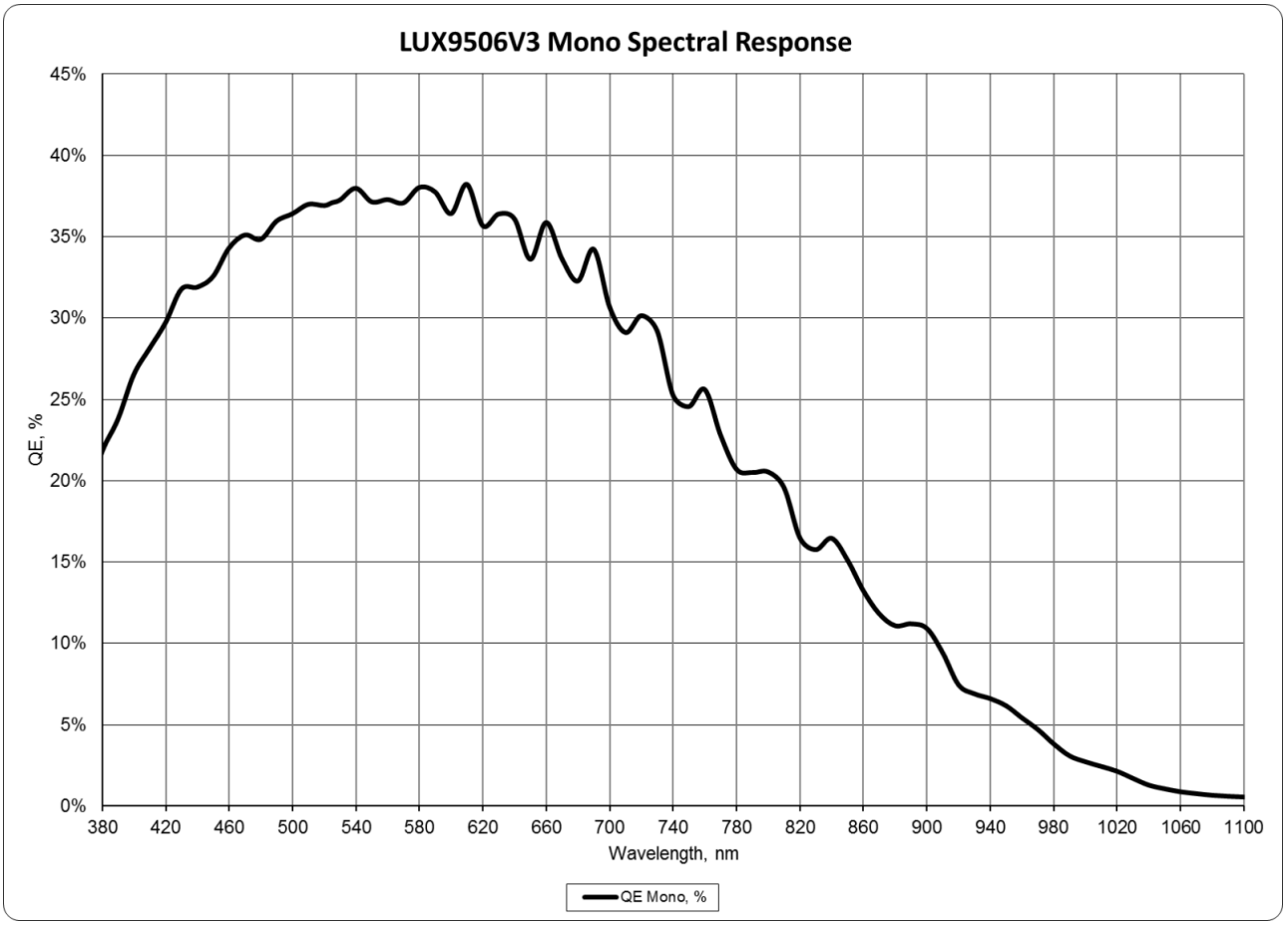

Technical Drawing

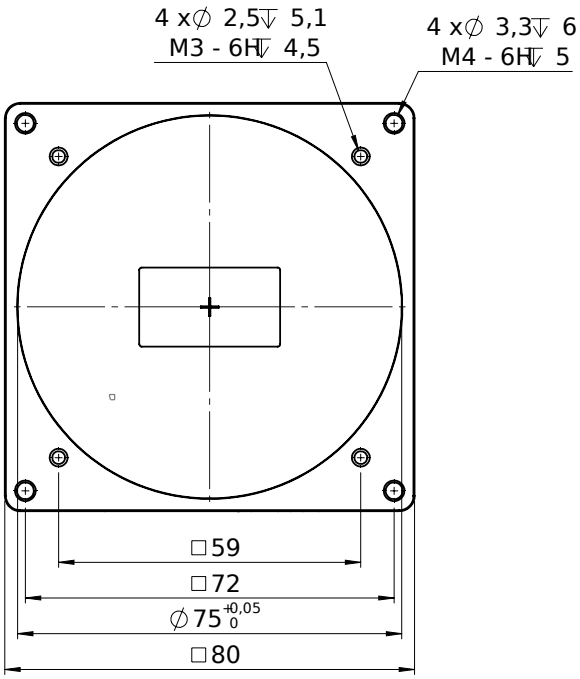

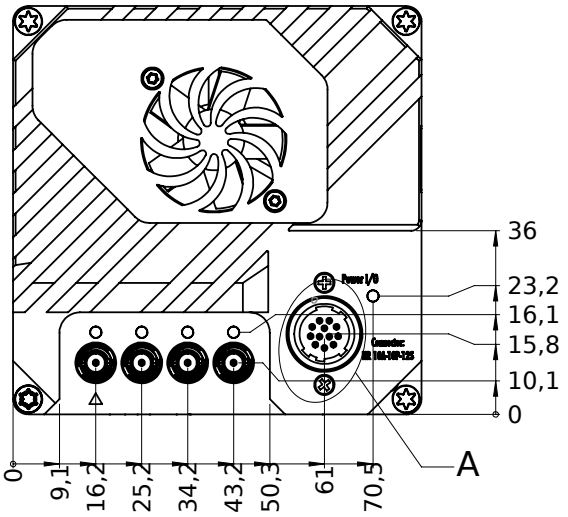

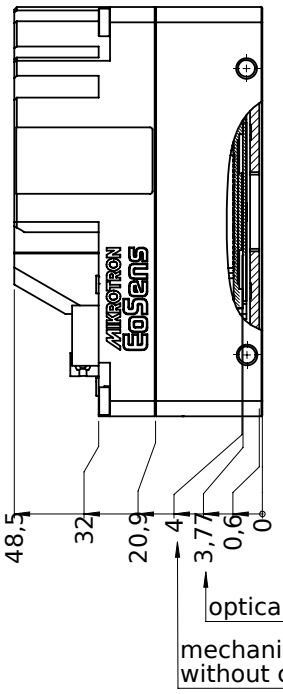

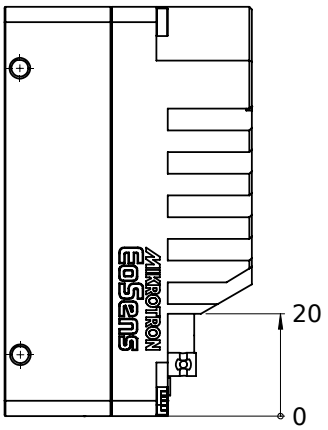

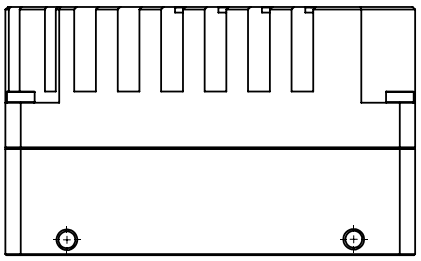

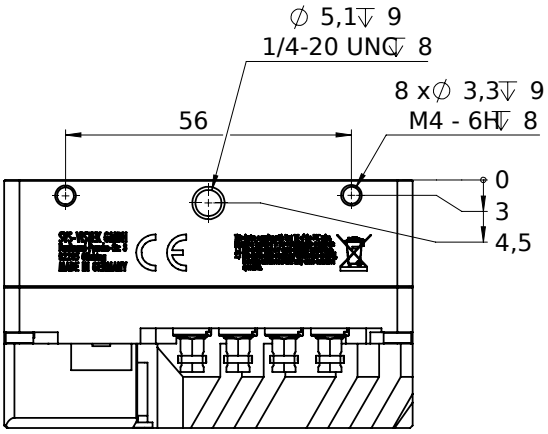

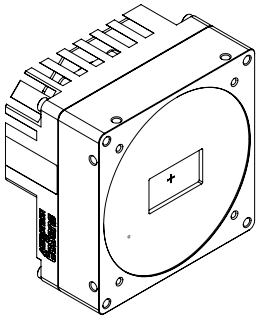

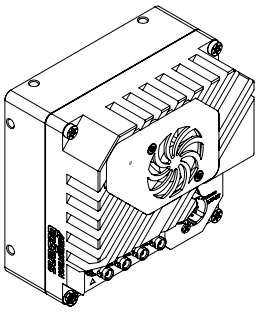

I/O pin assignment

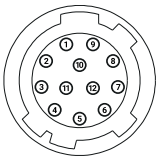

Pin	Signal	Pin	Signal
1	V_{out}- (GND)	7	OUT 1 (open drain)
2	V_{out}+ (24 V)	8	OUT 2 (open drain)
3	IN 4 RxD (RS 232)	9	LVDS Input P
4	OUT 4 TxD (RS 232)	10	LVDS Input N
5	IN 1 (0-24 V)	11	LVDS Output P
6	IN 2 (0-24 V)	12	LVDS Output N