Allied Vision



EoSens CoaXPress-12

EoSens21CCX12-M58

General

Model	EoSens21CCX12-M58
Product code	F006218
Product series	EoSens CoaXPress-12
Status	Available

Sensor

Sensor type	Area scan
Chroma	Color
Spectrum	Visible
Spectral range	350 nm to 1000 nm
Resolution	5,120 × 4,096 (21.00 MP)
Sensor model	Gpixel GSPRINT4521
Sensor architecture (material)	cmos
Shutter type(s)	Global shutter (GS)
Sensor size	23.04 × 18.43 mm (29.51 mm, Type APS-C)
Pixel size	4.50 µm × 4.50 µm

Pixel formats

Sensor bit depth	8-bit, 10-bit, 12-bit
RGB pixel formats	bayer8, bayer10, bayer12

Timing and gain

Max. frame rate	230 fps
Max. frame rate ROI modes	5120 x 4096 | 230 fps, 5120 x 3072 | 305 fps, 5120 x 1024 | 891 fps, 5120 x 128 | 5540 fps, x | 12560 fps,
Exposure time	4 µs to 1 s
Gain	0.0 dB to 12.0 dB

I/Os and power

Non-isolated lines	0 x LVDS input, 0 x LVDS output, 0 x TTL input, 0 x TTL output, 2 x 24V input, 0 x Open drain output,
Specific non-isolated lines	0 x RS232 input, 0 x RS232 output, 0 x RS422 input, 0 x RS422 output,
Opto-isolated lines	0 x Optical isolated input, 0 x Optical isolated input,
I/O connector	12-pin Hirose HR10A-10P-12S
Power supply	12 to 24VDC
Power consumption	External: 21 W (typical)

Operating conditions

Operating temperature	-10 °C to 60 °C (housing)

Mechanical properties

Body dimensions (L x W x H in mm)	55 × 80 × 80
IP class	IP30
Lens mount(s)	M58x0.75
Weight	630 g

Interfaces

Digital interface	cxp-12 with 4 connections
Interface connector	(micro-BNC)
Vision standard	CoaXPress 2.0

FW features - image control

Exposure modes	external
Gain modes	digital, analog
White balance modes	true
Image control features	roi, mirror-image

Quantum Efficiency

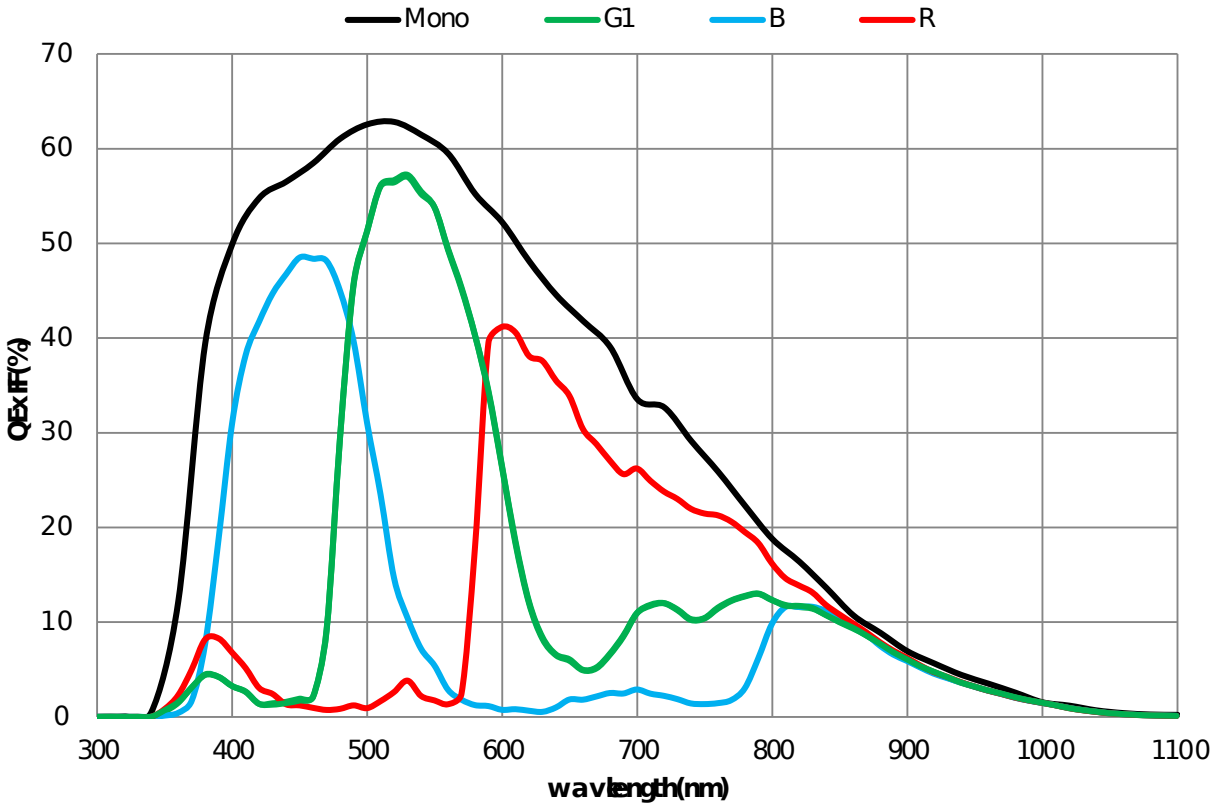

Technical Drawing

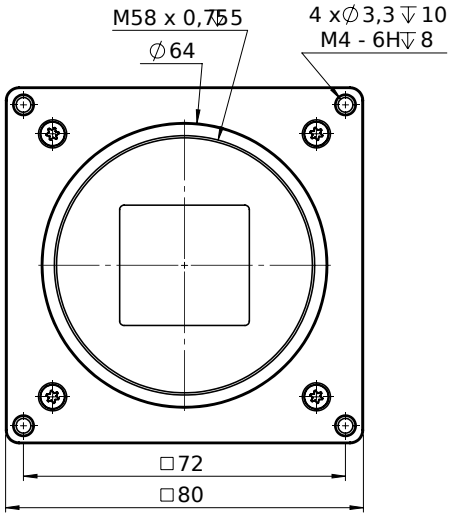

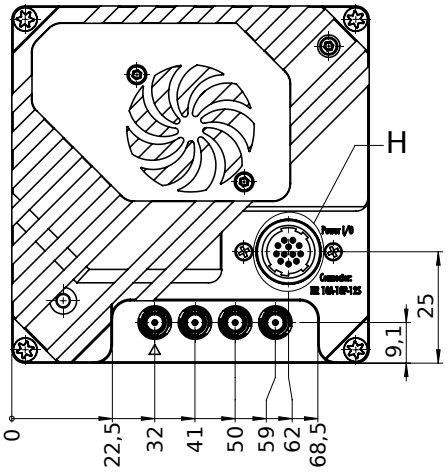

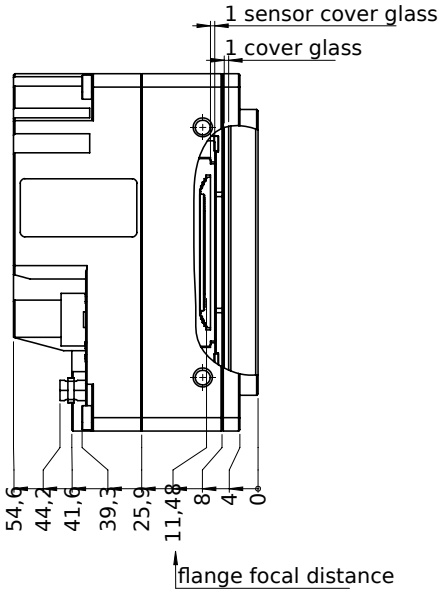

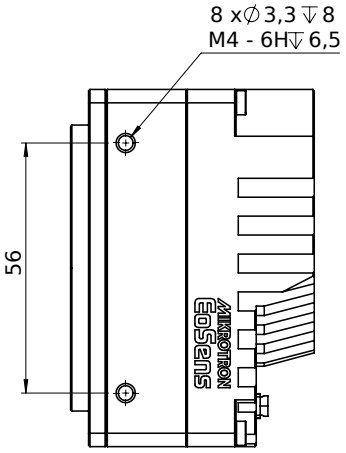

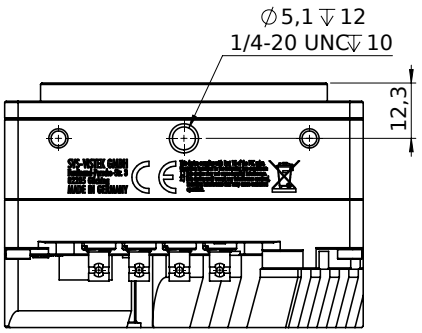

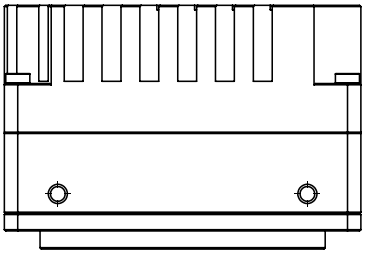

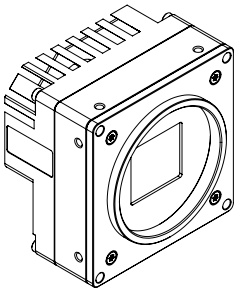

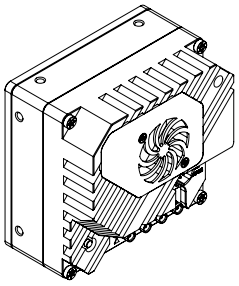

I/O pin assignment

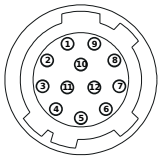

Pin	Signal	Pin	Signal
1 + 12	GND	6	IN0
2 + 11	VCC (12- 24V)	7	IO_{GND}
3	IO_{GND}	8	OUT1
4	OUT0	9	IO_{GND}
5	IO_{GND}	10	IN1