Allied Vision



EoSens CoaXPress-12

EoSens2.0MCX12-FM

General

Model	EoSens2.0MCX12-FM
Product code	F006008
Product series	EoSens CoaXPress-12
Status	Available

Sensor

Sensor type	Area scan
Chroma	Mono
Spectrum	Visible
Spectral range	400 nm to 1000 nm
Resolution	1,920 × 1,080 (2.00 MP)
Sensor model	Luxima Lux19HS
Sensor architecture (material)	cmos
Shutter type(s)	Global shutter (GS)
Sensor size	19.2 × 10.8 mm (22.03 mm, Type 4/3)
Pixel size	10.00 µm × 10.00 µm

Pixel formats

Sensor bit depth	8-bit, 10-bit
Monochrome pixel formats	mono8, mono10

Timing and gain

Max. frame rate	2247 fps
Max. frame rate ROI modes	1920 x 1080 | 2247 fps, 1024 x 768 | 3152 fps, 640 x 480 | 5020 fps, 128 x 128 | 18177 fps, 1920 x 8 | 170578 fps, x | 170575 fps,
Exposure time	2 µs to 1 s
Gain	0.0 dB to 18.0 dB

I/Os and power

Non-isolated lines	0 x LVDS input, 0 x LVDS output, 0 x TTL input, 0 x TTL output, 2 x 24V input, 0 x Open drain output,
Specific non-isolated lines	0 x RS232 input, 0 x RS232 output, 0 x RS422 input, 0 x RS422 output,
Opto-isolated lines	0 x Optical isolated input, 0 x Optical isolated input,
I/O connector	12-pin Hirose HR10A-10P-12S
Power supply	12 to 24VDC, Power over CoaXPress
Power consumption	External: 13 W (typical)

Operating conditions

Operating temperature	-10 °C to 65 °C (housing)

Mechanical properties

Body dimensions (L x W x H in mm)	84 × 80 × 80
IP class	IP30
Lens mount(s)	F-Mount
Weight	550 g

Interfaces

Digital interface	cxp-12 with 4 connections
Interface connector	(micro-BNC)
Vision standard	CoaXPress 2.0

FW features - image control

Exposure modes	external
Gain modes	digital, analog
Image control features	roi, mirror-image

FW features - camera control

Trigger modes/sync	external, trigger-over-cxp

Quantum Efficiency

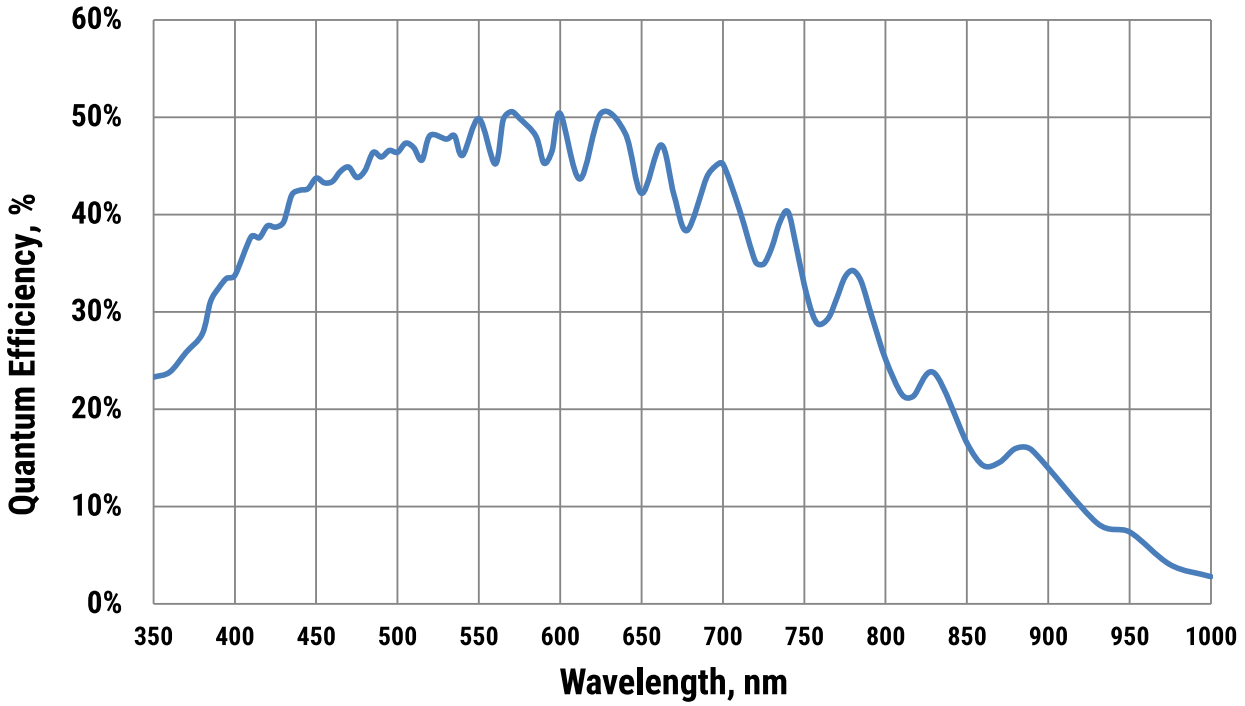

Allied Vision

Technical Drawing

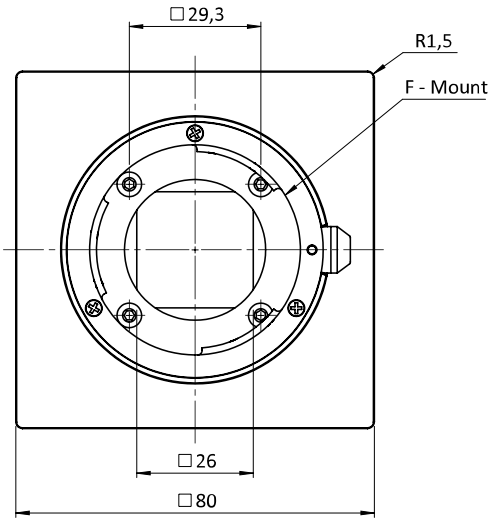

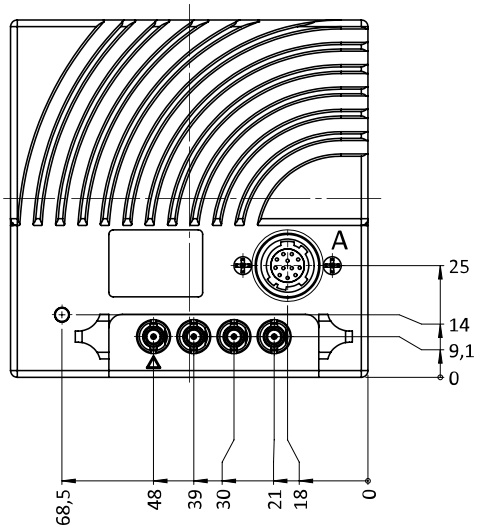

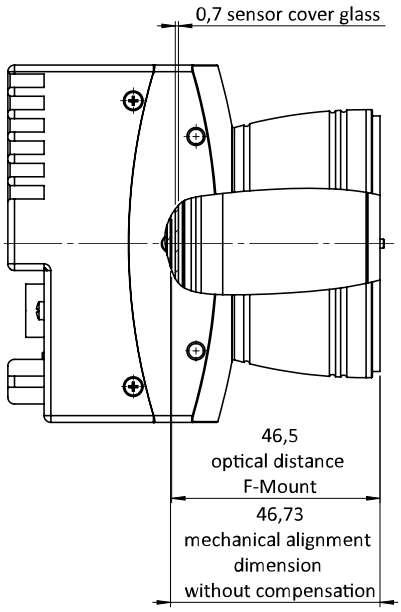

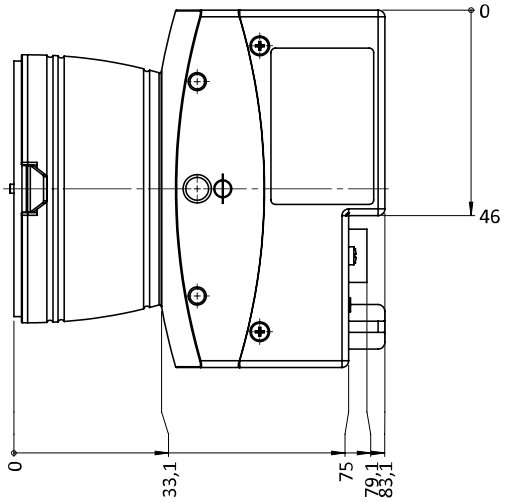

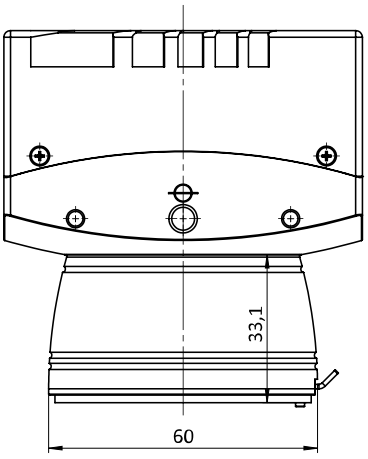

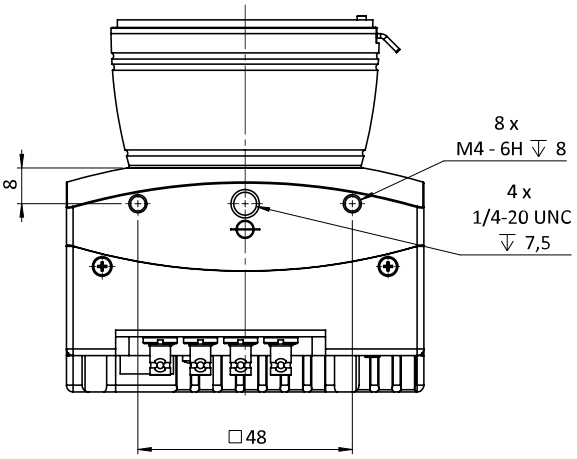

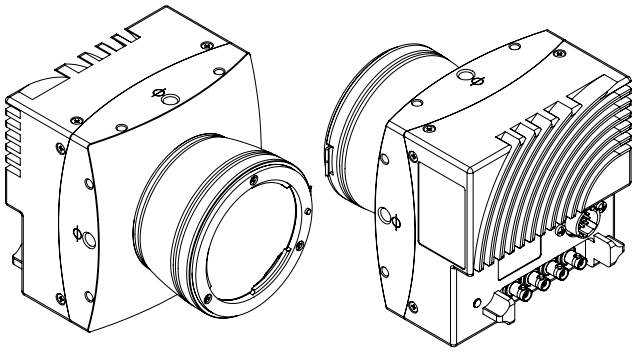

I/O pin assignment

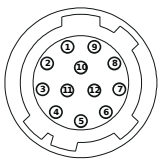

Pin	Signal	Pin	Signal
1 + 12	GND	6	IN0
2 + 11	VCC (12- 24V)	7	IO_{GND}
3	IO_{GND}	8	OUT1
4	OUT0	9	IO_{GND}
5	IO_{GND}	10	IN1