Alvium G5

Alvium G5-2040

Alvium G5-2040 innovative 5GBASE-T camera with Sony IMX541 CMOS global shutter sensor provides industrial performance for cost effective machine vision applications.

General

Model:	Alvium G5-2040
Product series:	Alvium G5
Status:	Available

Sensor

Sensor type:	Area scan
Chroma:	Mono or Color
Spectrum:	Visible
Spectral range:	300 nm to 1100 nm
Resolution:	4,512 × 4,512 (20.40 MP)
Sensor model:	Sony IMX541
Sensor architecture (material):	CMOS
Shutter type(s):	Global Shutter
Sensor size:	17.60 mm diagonal (Type 1.1)
Pixel size:	2.74 µm × 2.74 µm

Pixel formats

Sensor bit depth:	12-bit
Monochrome pixel formats:	Mono8, Mono10, Mono10p, Mono12, Mono12p, Mono12Packed
YUV pixel formats:	YCbCr411_8_CbYYCrYY, YCbCr422_8_CbYCrY, YCbCr8_CbYCr
RGB pixel formats:	RGB8 (default), BGR8

Pixel formats

Bayer pixel formats:	BayerRG8, BayerRG10, BayerRG10p, BayerRG12, BayerRG12p, BayerRG12Packed
Output color space:	12-bit

Imaging performance

Quantum efficiency @ 529 nm:	68 %

Timing and gain

Max. frame rate:	25 fps

I/Os and power

Non-isolated lines:	2 GPIOs (LVTTL)
Opto-isolated lines:	1 input, 1 output
Power supply:	10.8 to 26.4 VDC AUX | IEEE 802.3af, Power Class 0 PoE
Power consumption:	External power: 6.9 W at 12 VDC (typical) | Power over Ethernet: 7.6 (typical)

Operating conditions

Operating temperature (housing):	-20 °C to 55 °C housing temperature

Mechanical properties

Body dimensions (L x W x H in mm):	60 × 29 × 29
Lens mount(s):	C-Mount, CS-Mount
Weight:	100 g

On-board memory and FPGA

Image buffer (RAM):	512 MByte
Non-volatile memory (Flash):	1024 KByte

Interfaces

Digital interface:	IEEE 802.3: 5GBASE-T or 2.5GBASE-T (NBASE-T) and 1000BASE-T, IEEE 802.3af Power Class 0 PoE

Quantum Efficiency

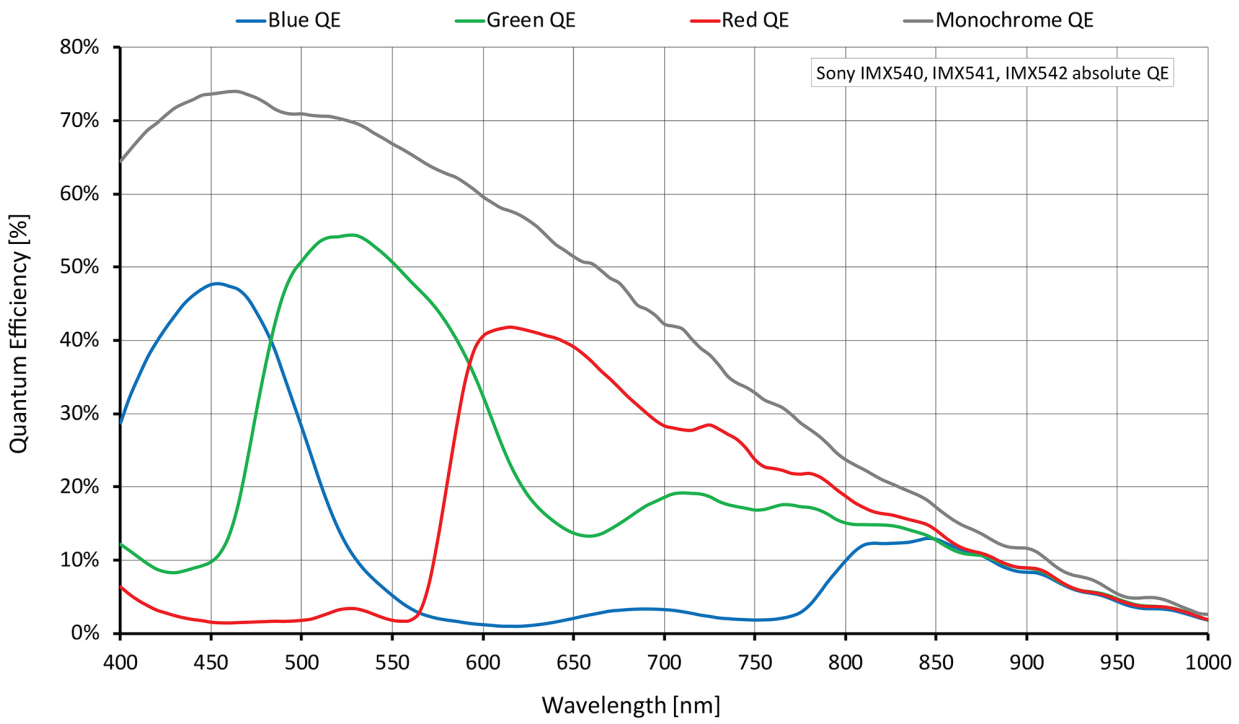

Technical Drawing

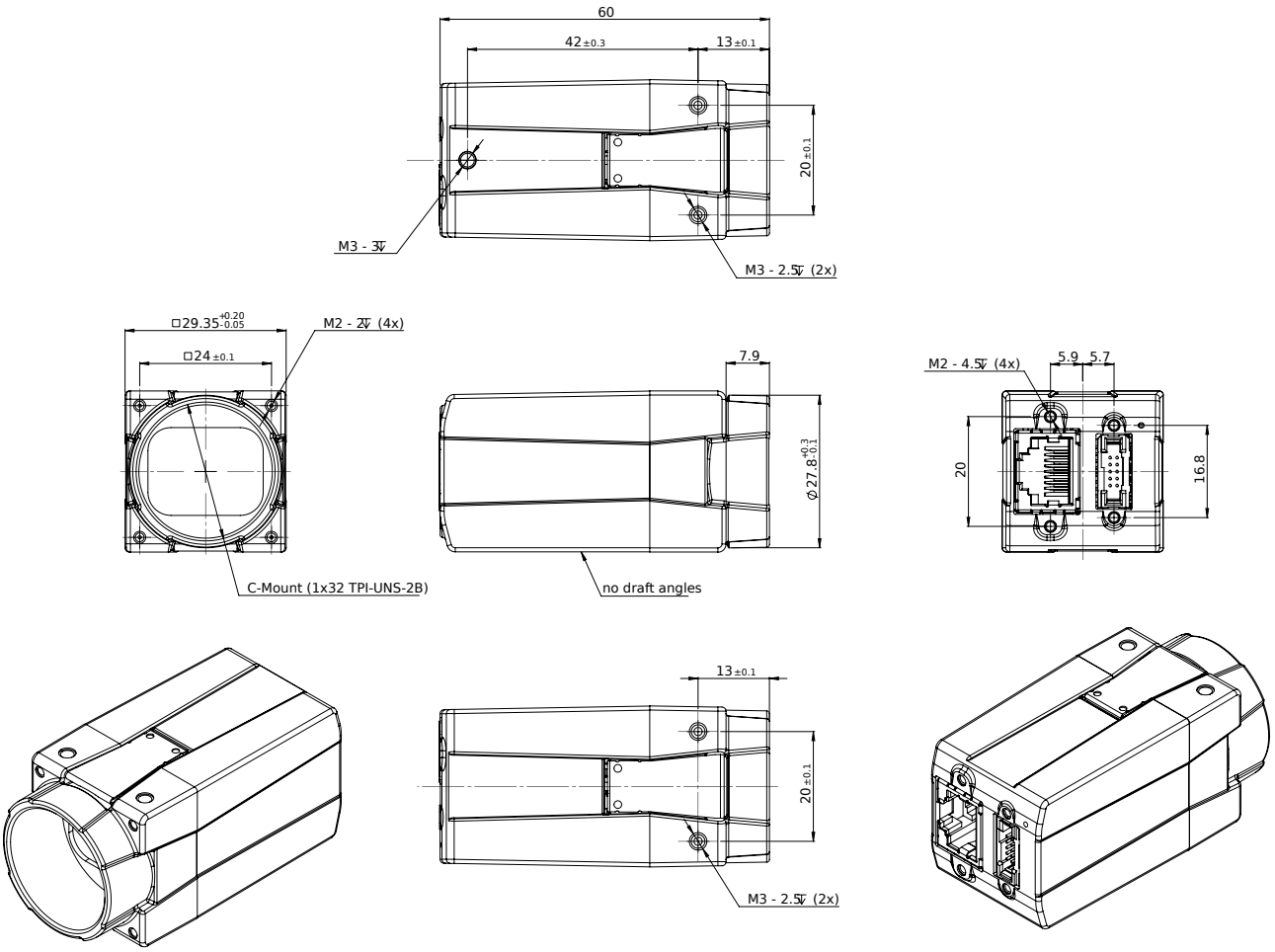

Allied Vision