Allied Vision

Alvium C

Alvium 1800 C-291



Alvium 1800 C-291 innovative MIPI CSI-2 camera with Sony IMX421 CMOS global shutter sensor provides industrial performance for cost effective embedded and machine vision applications.

General

Model	Alvium 1800 C-291
Product series	Alvium C
Status	Available

Sensor

Sensor type	Area scan
Chroma	Color, Mono
Spectrum	Visible
Spectral range	300 nm to 1100 nm
Resolution	1,944 × 1,472 (2.90 MP)
Sensor model	Sony IMX421
Sensor architecture (material)	cmos
Shutter type(s)	Global shutter (GS)
Sensor size	8.8 × 6.6 mm (10.8 mm, Type 2/3)
Pixel size	4.50 µm × 4.50 µm

Pixel formats

Sensor bit depth	10-bit, 12-bit, 8-bit
Monochrome pixel formats	GREY, RAW10, RAW12, RAW8, Y10, Y12
YUV pixel formats	UYVY, YCbCr411_8_CbYYCrYY, YCbCr422_8_CbYCrY, YCbCr8_CbYCr, YUV422 8-bit
RGB pixel formats	BGR8, RGB3, RGB8 (default), RGB888 (default)
Bayer pixel formats	BayerGR10, BayerGR10p, BayerGR12, BayerGR12p, BayerGR8

Imaging performance

Quantum efficiency @ 529 nm	73 %

Timing and gain

Max. frame rate	166 fps
Exposure time	17 µs to 10 s
Gain	0.0 dB to 48.0 dB

I/Os and power

Non-isolated lines	2 programmable GPIOs
Power supply	5 VDC over MIPI CSI-2
Power consumption	Typical: 3.8 W

Operating conditions

Operating temperature	-20 °C to 65 °C (housing)

Mechanical properties

Body dimensions (L x W x H in mm)	26 × 29 × 29
Lens mount(s)	C-Mount, CS-Mount
Weight	40 g

On-board memory and FPGA

Image buffer (RAM)	256 KByte
Non-volatile memory (Flash)	1024 KByte

Interfaces

Digital interface	MIPI CSI-2, up to 4 lanes

Quantum Efficiency

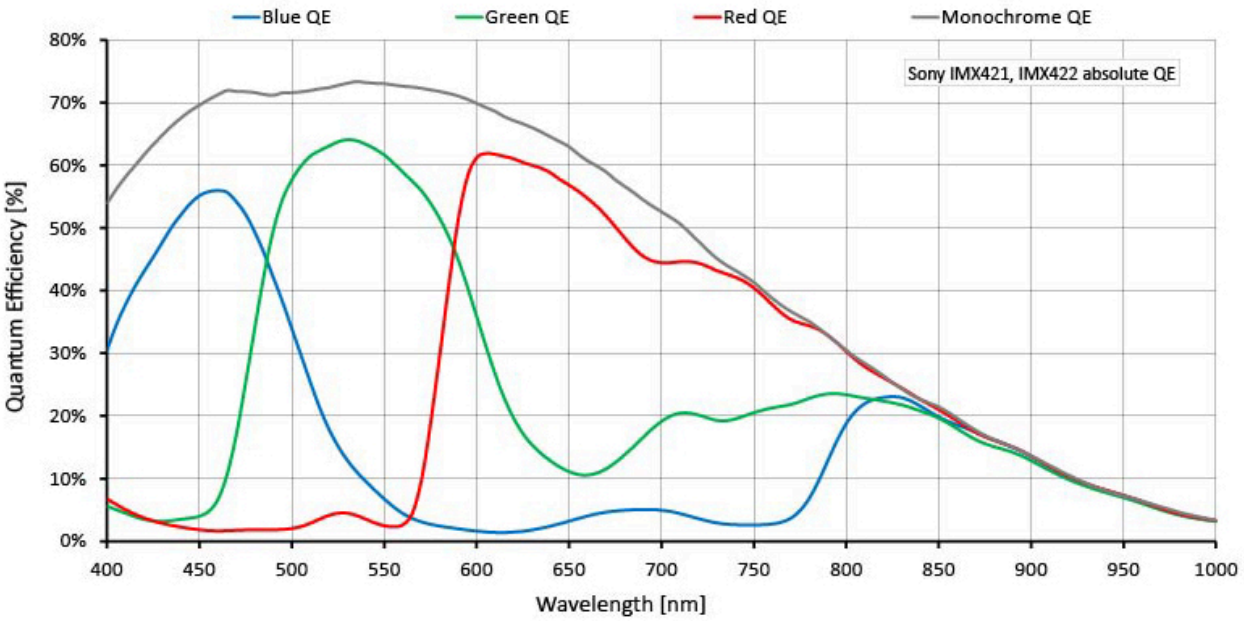

Technical Drawing

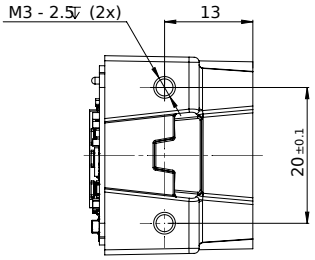

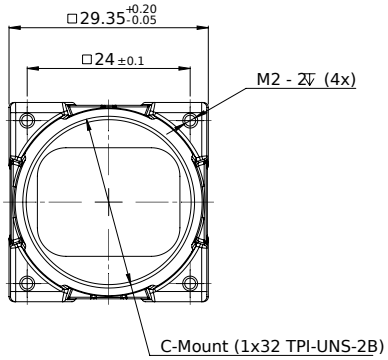

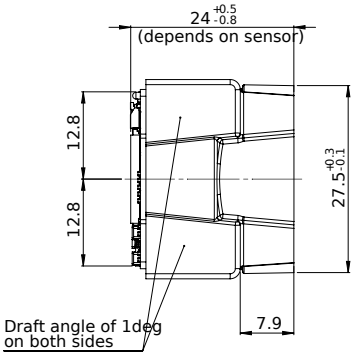

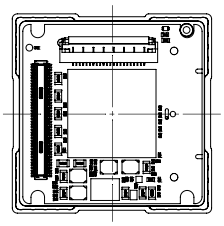

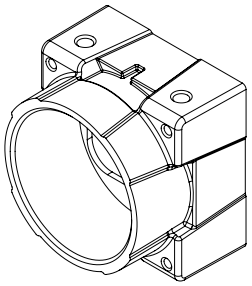

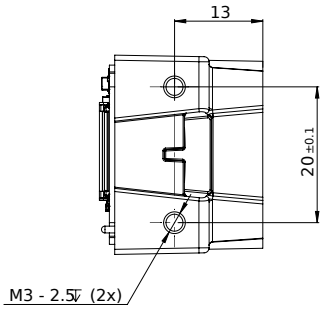

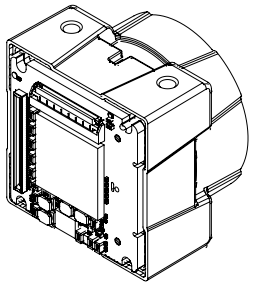

Allied Vision