Allied Vision

FireWire

Stingray
F-125

- Versatile 1.2 MP camera
- Advanced feature set
- Many variants
- Excellent image quality

基本描述

Industrial camera, Sony EXview HAD CCD sensor ICX445

The Stingray F-125B/F-125C is equipped with the Sony ExView HAD CCD sensor ICX445 and has an extra high sensitivity. At full resolution, it runs at 30 fps. Higher frame rates can be reached by a smaller AOI, binning (b/w) or sub-sampling.

Options:

- IEEE 1394b connectors: 2 x copper (daisy chain), Hirose power: out
- Various IR cut/pass filters, various lens mounts
- Angled head, board level version, white medical housing

性能参数

Stingray	F-125
接口	IEEE 1394b - 800 Mb/s, 2 ports, daisy chain
分辨率	1292 (H) × 964 (V)
传感器	Sony ICX445
传感器类型	CCD Progressive
像元尺寸	3.75 µm x 3.75 µm
镜头接口	C-Mount
分辨率下最高帧速	30 fps
ADC	14 bit
缓存 (RAM)	Up to 128 MByte
非易失性内存 (Flash)	256 KByte (for selected models only)
输出	
Bit位数	8-14 bit

Stingray	F-125
黑白模式	Mono8, Mono12, Mono16
彩色模式RGB	RGB8
原始模式	Raw8, Raw12, Raw16
通用输入输出口(GPIOs)	
光耦 I/Os	2 inputs, 4 outputs
RS-232	1
工作条件/尺寸	
工作温度	+5 °C to +45 °C
电源要求 (DC)	8 V to 36 V
功耗 (@12 V)	<4 W
重量	92 g
尺寸(L × W × H in mm)	72.9 × 44 × 29 (including connectors)
符合规范	CE, RoHS, REACH, WEEE, FCC, ICES

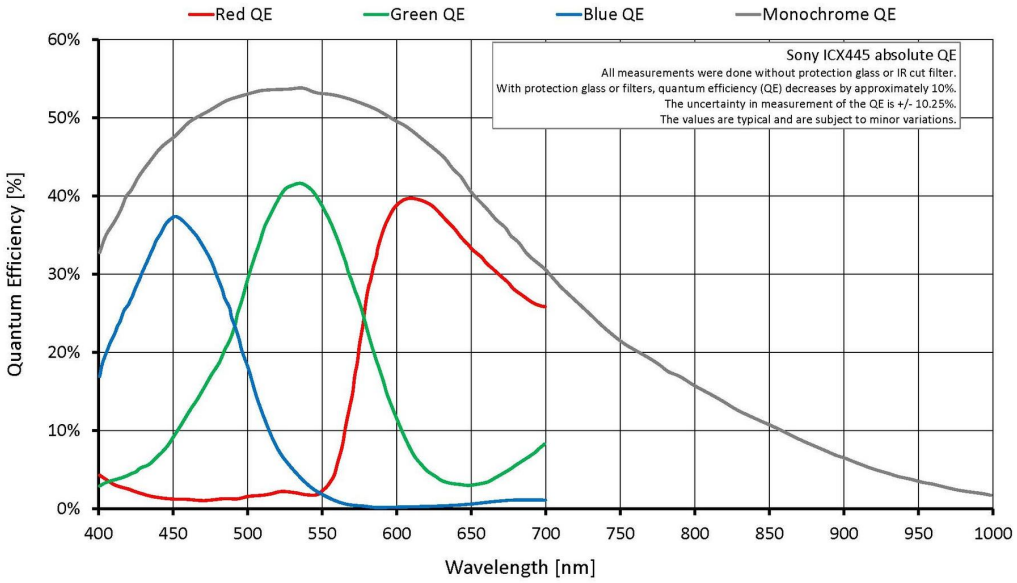

特性

- High SNR mode (up to 24 dB better signal-to-noise ratio)
- Low-noise binning mode
- Shading correction
- Defect pixel correction
- AOI, separate AOI for auto features
- Binning
- Decimation

- Auto gain (manual gain control: 0 to 24.4 dB)
- Auto exposure (25 µs to 67 s)
- Auto white balance
- Look-up table (LUT)
- Hue, saturation
- Color correction
- Local color anti-aliasing
- Reverse X/Y
- Deferred image transport
- Trigger programmable, level, single, bulk, programmable delay
- Sequence mode (changes the camera settings on the fly)
- SIS (secure image signature, time stamp for trigger, frame count etc.)
- Storable user sets
- Non-volatile memory 256 KByte (for selected models only)

发货方式

- 相机和1394b数据线一套（特殊要求除外）

Allied Vision

外形尺寸

2 x 1394b copper

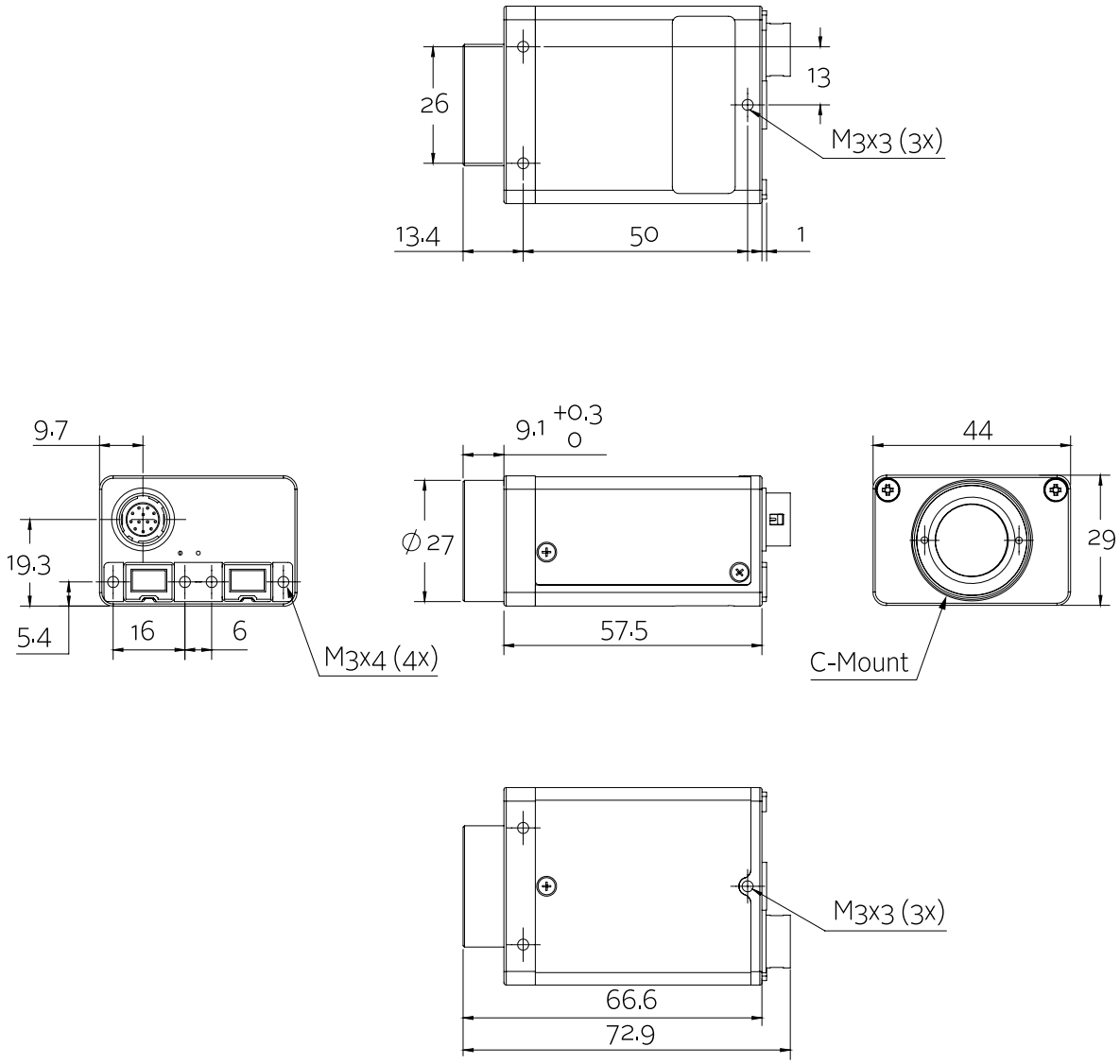

应用场景

Stingray F-125B/F-125C cameras incorporate the Sony EXview HAD sensor ICX445 (very high sensivity). Furthermore, its smart functions like the High SNR mode enhance the image quality especially in low light situations. This industrial camera is ideally suited for:

- Industrial inspection and automation
- Logistics
- Science and research
- Healthcare and medical (light gray housing available)
- Multimedia, entertainment and sports
- Intelligent traffic solutions (ITS)
- ... and many more

Additionally, it is ideally suited for:

- Demanding OEM camera applications (board level versions with separate sensor board available on request)
- Daisy chaining (two copper connectors)