Allied Vision

FireWire

Stingray
F-046

- Versatile 0.5 MP camera
- Advanced feature set
- Many variants
- Excellent image quality

基本描述

IEEE 1394b camera - Sony ICX415

The Stingray F-046B/F-046C is a IEEE 1394b camera with a sensitive Sony HAD CCD sensor (ICX415), and runs at 61 fps at full resolution. Thanks to its comprehensive image pre-processing functions, it delivers an outstanding high image quality.

Options:

- IEEE 1394b connectors: 2 x copper (daisy chain), Hirose power: out
- Various IR cut/pass filters, various lens mounts
- Angled head, board level version, white medical housing

性能参数

Stingray	F-046
接口	IEEE 1394b - 800 Mb/s, 2 ports, daisy chain
分辨率	780 (H) × 580 (V)
传感器	Sony ICX415
传感器类型	CCD Progressive
像元尺寸	8.3 µm x 8.3 µm
镜头接口	C-Mount
分辨率下最高帧速	61 fps
ADC	14 bit
缓存 (RAM)	Up to 128 MByte
非易失性内存 (Flash)	256 KByte (for selected models only)
输出	
Bit位数	8-14 bit

Stingray	F-046
黑白模式	Mono8, Mono12, Mono16
彩色模式RGB	RGB8
原始模式	Raw8, Raw12, Raw16
通用输入输出口(GPIOs)	
光耦 I/Os	2 inputs, 4 outputs
RS-232	1
工作条件/尺寸	
工作温度	+5 °C to +45 °C
电源要求 (DC)	8 V to 36 V
功耗 (@12 V)	<4 W
重量	92 g
尺寸(L × W × H in mm)	72.9 × 44 × 29 (including connectors)
符合规范	CE, RoHS, REACH, WEEE, FCC, ICES

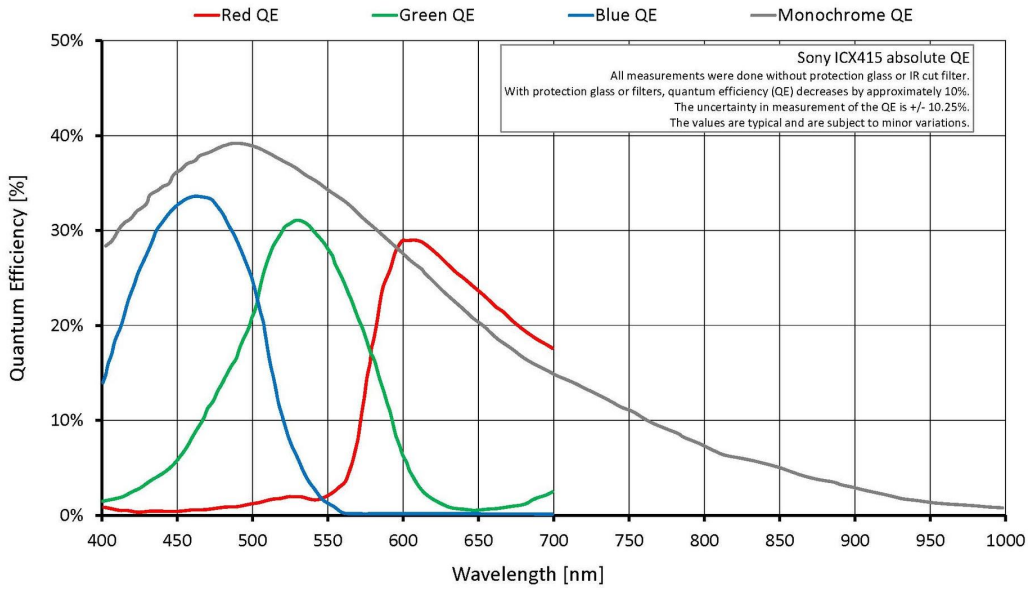

特性

- High SNR mode (up to 24 dB better signal-to-noise ratio)
- Low-noise binning mode
- Shading correction
- Defect pixel correction
- AOI, separate AOI for auto features
- Binning
- Decimation

- Auto gain (manual gain control: 0 to 24.4 dB)
- Auto exposure (31 µs to 67 s)
- Auto white balance
- Look-up table (LUT)
- Hue, saturation
- Color correction
- Local color anti-aliasing
- Reverse X/Y
- Deferred image transport
- Trigger programmable, level, single, bulk, programmable delay
- Sequence mode (changes the camera settings on the fly)
- SIS (secure image signature, time stamp for trigger, frame count etc.)
- Storable user sets
- Non-volatile memory 256 KByte (for selected models only)

发货方式

- 相机和1394b数据线一套（特殊要求除外）

Allied Vision

外形尺寸

2 x 1394b copper

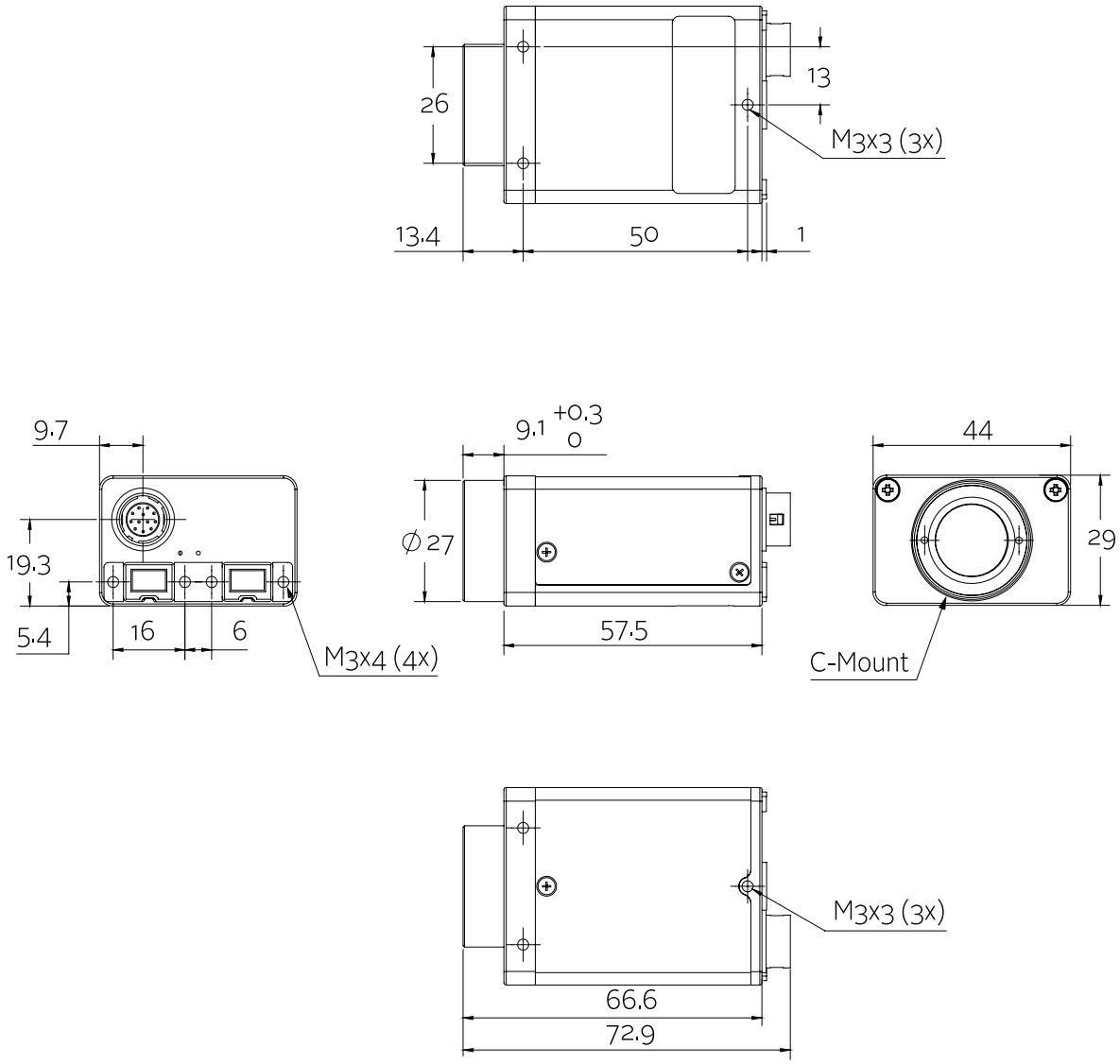

应用场景

The Stingray F-046B/F-046C includes comprehensive image pre-processing functions. It is only mid-priced, but performs with high image quality. This 0.5 Megapixel IEEE 1394b camera is suitable for applications with high demands:

- Industrial inspection and automation
- Logistics
- Science and research
- Healthcare and medical (light gray housing available)
- Multimedia, entertainment and sports
- Intelligent traffic solutions (ITS)

Additionally, it is ideally suited for:

- Demanding OEM camera applications (board level versions with separate sensor board available on request)
- Daisy chaining (two copper connectors)