Allied Vision

Mako G

G-125

- Ultra-compact (60.5 × 29 × 29 mm)
- Affordable
- PoE
- 30 fps @ 1.2 Megapixel

基本描述

GigE camera with Sony ICX445 sensor

Mako G-125B/C is an industrial GigE camera with Sony's ICX445 sensor. Mako G cameras have the same 29 x 29 mm form factor and the same mounting positions as many analog cameras. All models include PoE, three opto-isolated outputs, and a 64 MB FIFO image buffer. The image quality profits from the precisely aligned sensors.
Options

- Various IR cut/pass filters, protection glass, various lens mounts
- White medical housing

性能参数

Mako G	G-125
接口	IEEE 802.3 1000BASE-T, IEEE 802.3af (PoE)
分辨率	1292 × 964
传感器	Sony ICX445
传感器类型	CCD Progressive
像元尺寸	3.75 µm x 3.75 µm
镜头接口	C-Mount
分辨率下最高帧速	30.3 fps
ADC	14 bit
缓存 (RAM)	64 MByte
非易失性内存 (Flash)	1024 KByte (for selected models only)
输出	
Bit位数	8/12 bit

Mako G	G-125
黑白模式	Mono8, Mono12, Mono12Packed
彩色模式 YUV	YUV411Packed, YUV422Packed, YUV444Packed
彩色模式RGB	RGB8Packed, BGR8Packed
原始模式	BayerRG8, BayerRG12, BayerRG12Packed
通用输入输出口(GPIOs)	
光耦 I/Os	1 input, 3 outputs
工作条件/尺寸	
工作温度	+5 °C to +45 °C housing temperature
电源要求 (DC)	12 to 24 VDC; PoE
功耗 (@12 V)	2.3 W @ 12 VDC; 2.7 W PoE
重量	80 g
尺寸(L × W × H in mm)	60.5 × 29 × 29 mm, incl. connectors
符合规范	CE, RoHS, REACH, WEEE, FCC, ICES

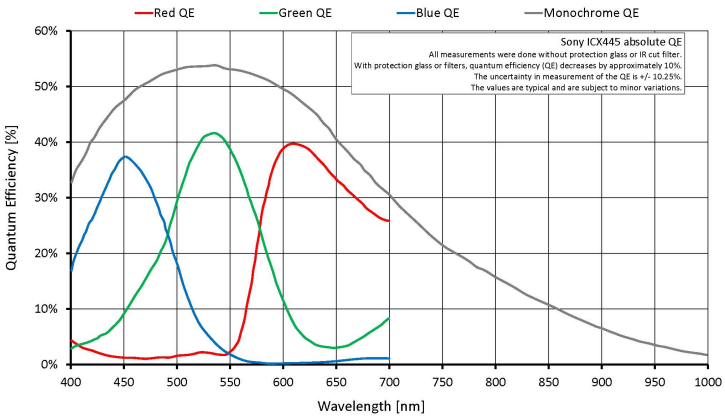

特性

- Camera temperature monitoring
- ROI, separate ROI for auto features
- Binning
- Auto gain (manual gain control: 0 to 30 dB)
- Auto exposure (manual exposure control: 12 µs to 84 s)
- Auto white balance
- LUTs (look-up tables)

- Gamma
- Hue, saturation, color correction
- StreamBytesPerSecond (easy bandwidth control)
- Stream hold
- Sync out modes: Trigger ready, input, exposing, readout, imaging, strobe, GPO
- Event channel
- Chunk data
- Storable user sets
- Non-volatile memory 1024 KByte (for selected models only)

Allied Vision

外形尺寸

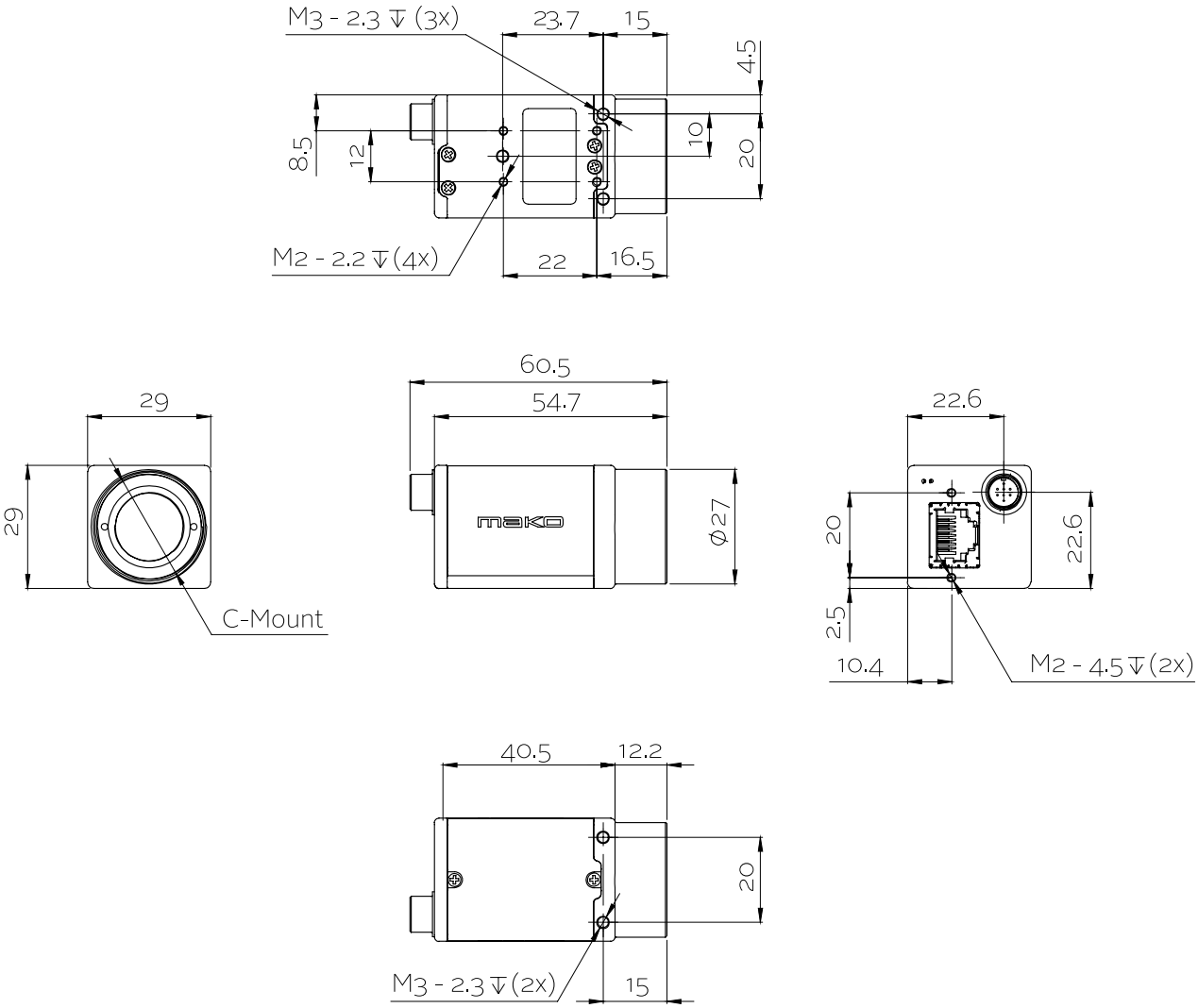

应用场景

Mako G is an inexpensive industrial GigE camera with a compact form factor. It is suitable for all typical machine vision applications:

- Robotics
- Quality control
- Inspection, surveillance
- Industrial imaging
- Machine vision
- Logistics