bottom view

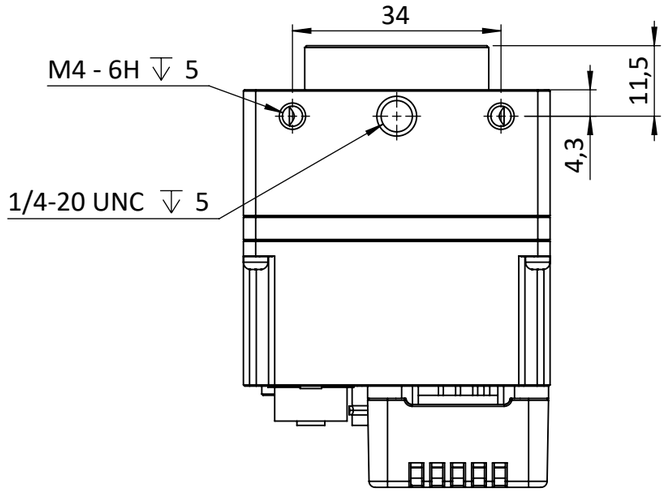

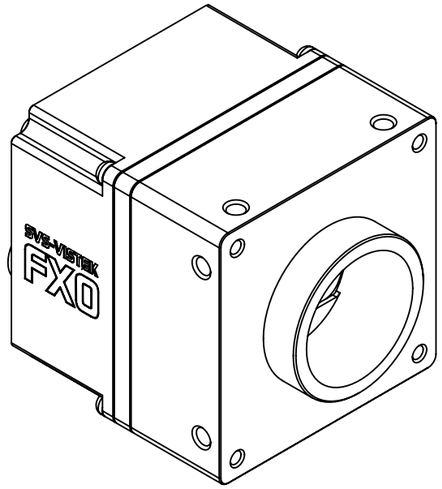

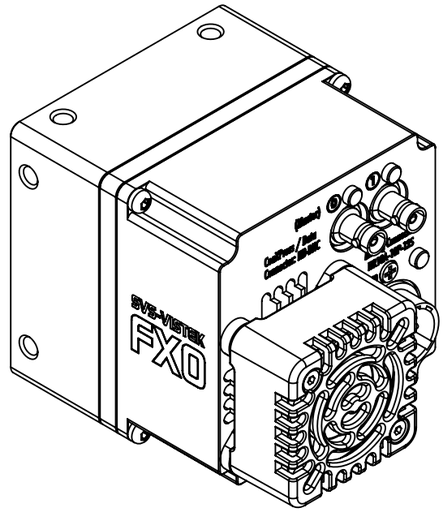

right view

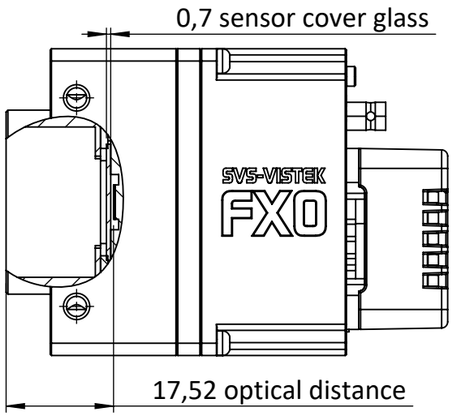

front view

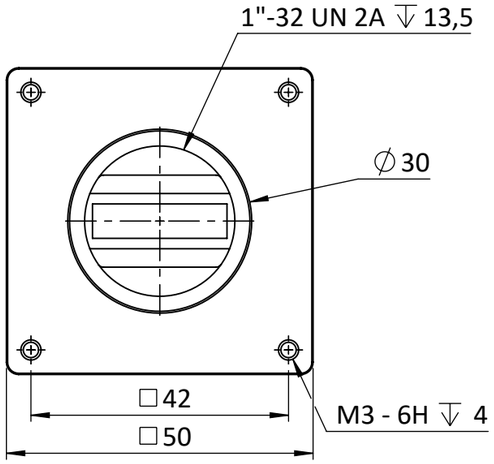

left view

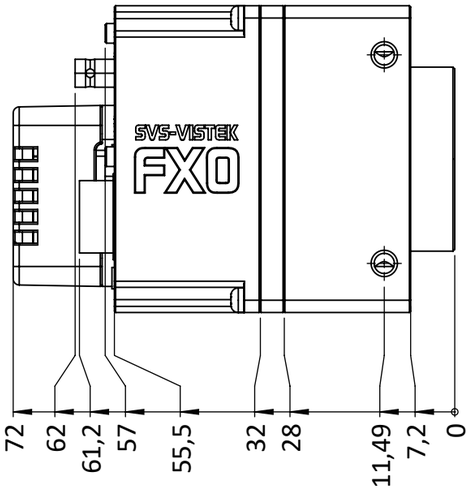

back view

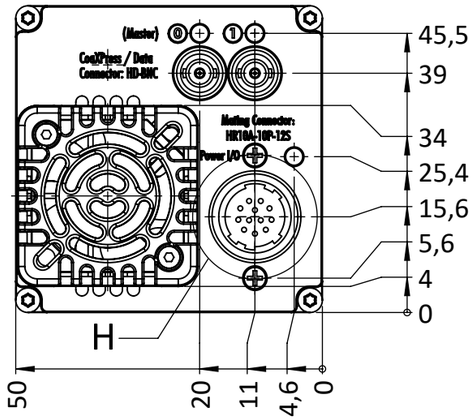

	Hirose Pinout EXO, HR (CL Deca, CXP), SHR
Pin	Signal EXO, HR (CL Deca, CXP), SHR
1	V IN- (GND)
2	V IN+ (10 - 25V)
3	IN 4 RxD (RS232)
4	OUT 4 TxD (RS232)
5	IN 1 (0 - 24V)
6	IN 2 (0 - 24V)
7	OUT 1 (open drain)
8	OUT 2 (open drain)
9	IN 3+ (opto IN+)
10	IN 3- (opto IN-)
11	OUT 3 (open drain)
12	OUT 0 (open drain)
	Shielding

Hirose Connector

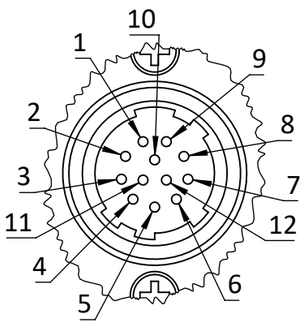

DETAIL H
MAßSTAB 2 : 1

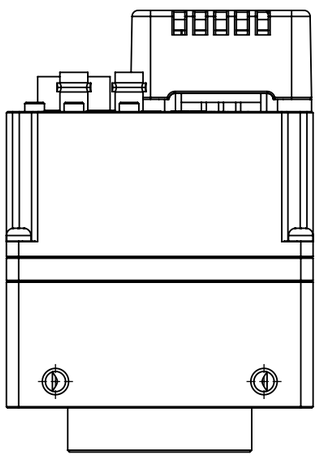

top view

drawing applies to mono and color cameras

FXO901CCX12-2C

FXO901MCX12-2C

SVS-VISTEK		all dimensions in mm unless otherwise specified	Scale: 1:1	Rev.: 1	
			Customer Interface Drawing		
	Name	Sign.	Date		
Drawn	C.Thomas		18.12.2024	Title: FXO901xCX12-2C	
Checked					
			Material:	Material No.:	A3
			Weight:		Blatt / Sheet 1 / 1