bottom view

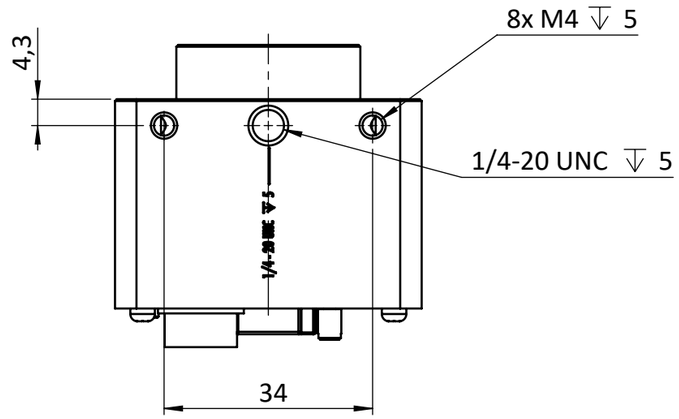

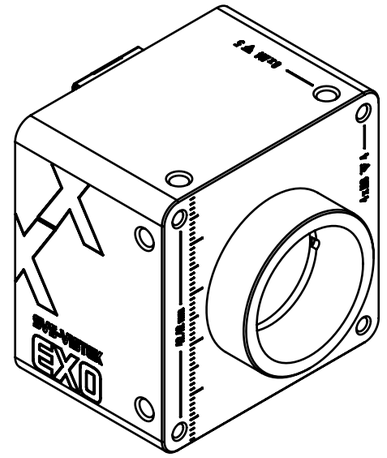

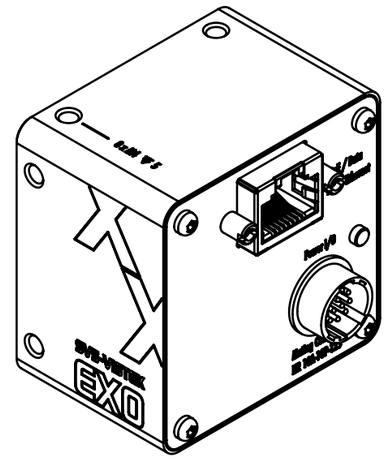

right view

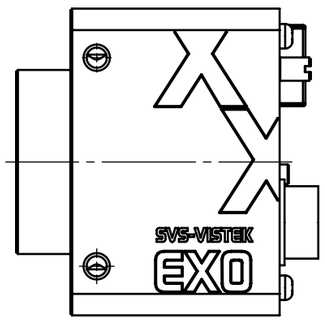

front view

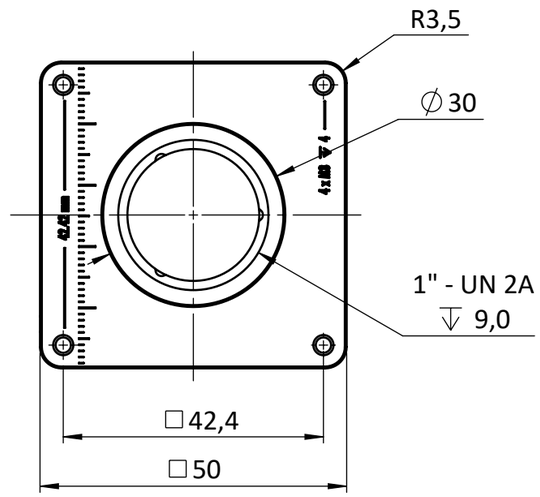

left view

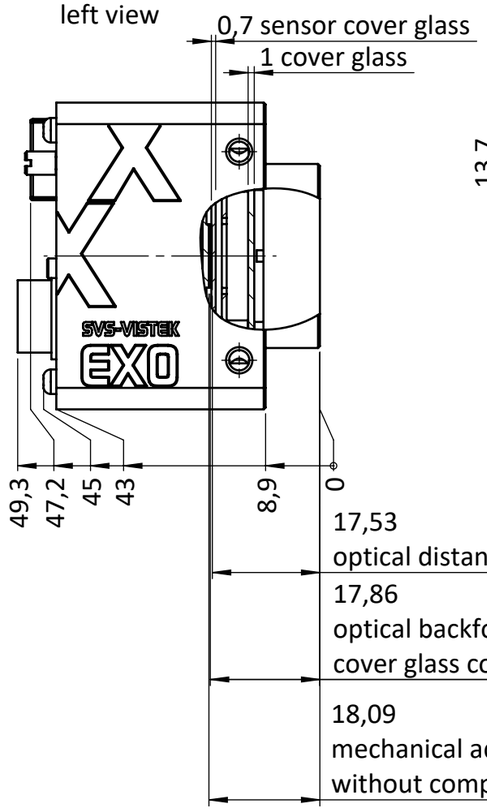

back view

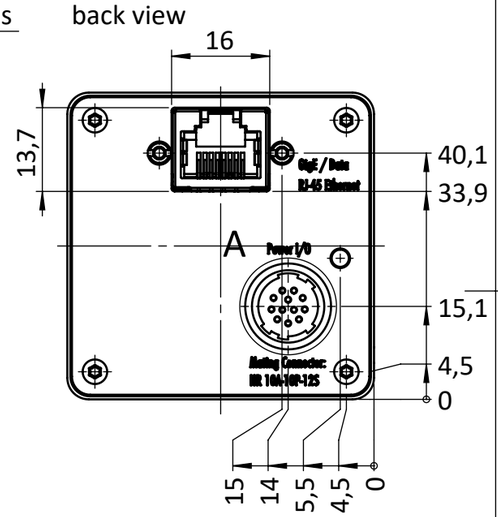

drawing applies to mono and color cameras
EXO 253xGE
EXO 255xGE
EXO 267xGE
EXO 304xGE

	Hirose Pinout EXO, HR (CL Deca, CXP), SHR
Pin	Signal EXO, HR (CL Deca, CXP), SHR
1	V IN- (GND)
2	V IN+ (10 - 25V)
3	IN 4 RxD (RS232)
4	OUT 4 TxD (RS232)
5	IN 1 (0 - 24V)
6	IN 2 (0 - 24V)
7	OUT 1 (open drain)
8	OUT 2 (open drain)
9	IN 3+ (opto IN+)
10	IN 3- (opto IN-)
11	OUT 3 (open drain)
12	OUT 0 (open drain)
	Shielding

Hirose Connector

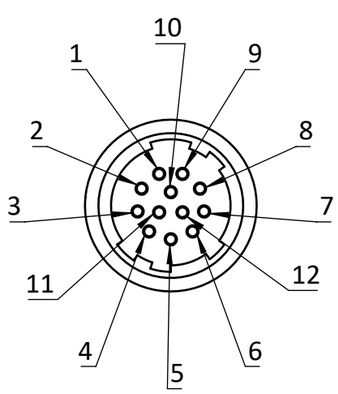

DETAIL A
MAßSTAB 2 : 1

top view

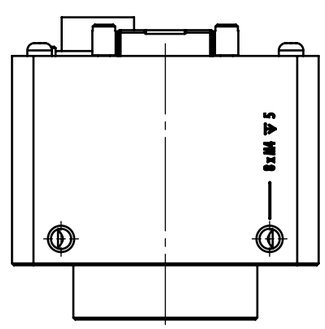

SVS-VISTEK

all dimensions in mm unless otherwise specified

Scale: 1:1

Rev.: 1

Customer Interface Drawing

	Name	Sign.	Date
Drawn	S.Seiler		01.09.2021
Checked			

Title:
EXO253_255_267_304 xGE POE

Material:

Material No.:

A3

Weight:

Blatt / Sheet 1 / 1