bottom view

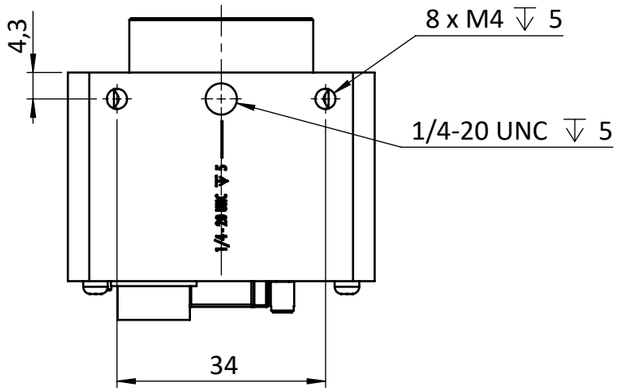

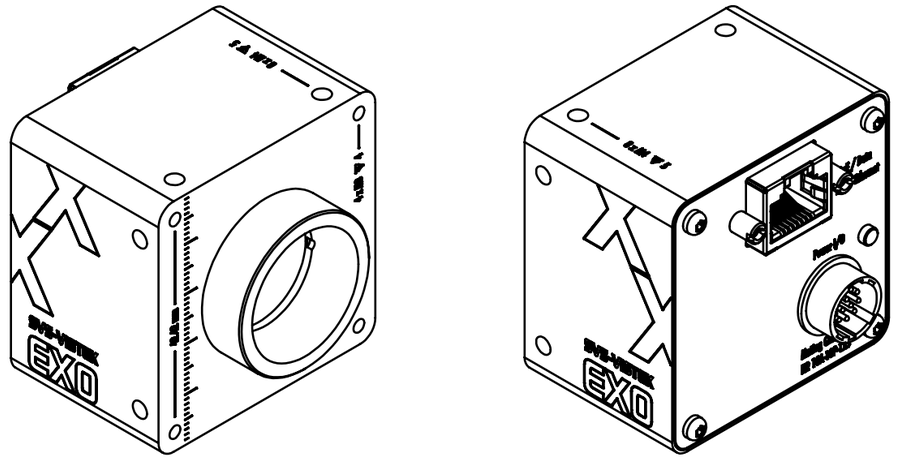

right view

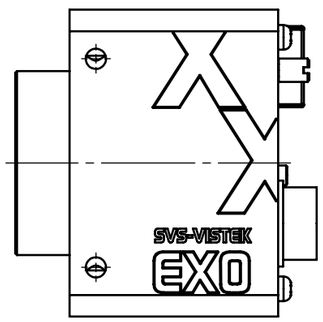

front view

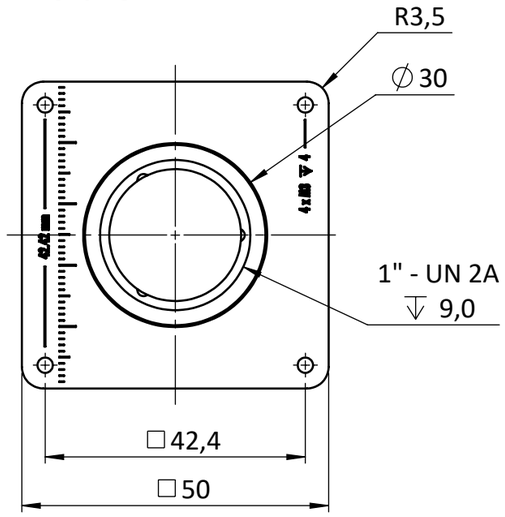

left view

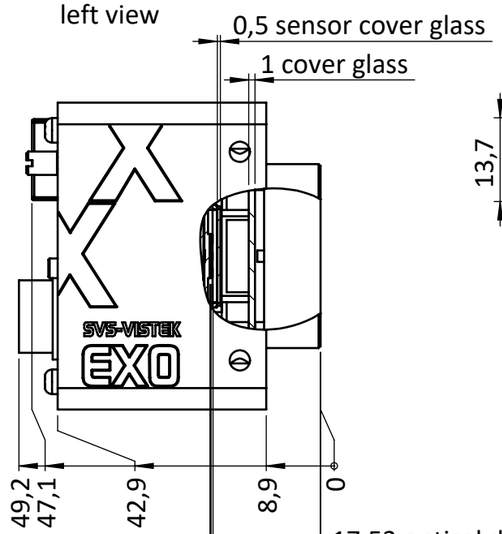

back view

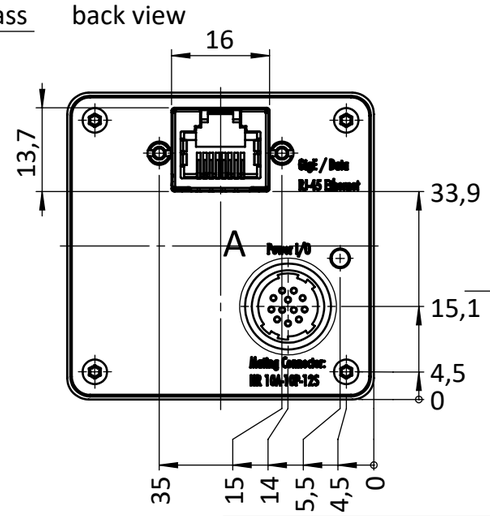

drawing applies to mono and color cameras
EXO 174xGE
EXO183xGE
EXO 428, 429xGE
EXO 540, 541, 542xGE
EXO546, 547xGE

	Hirose Pinout EXO, HR (CL Deca, CXP), SHR
Pin	Signal EXO, HR (CL Deca, CXP), SHR
1	V IN- (GND)
2	V IN+ (10 - 25V)
3	IN 4 RxD (RS232)
4	OUT 4 TxD (RS232)
5	IN 1 (0 - 24V)
6	IN 2 (0 - 24V)
7	OUT 1 (open drain)
8	OUT 2 (open drain)
9	IN 3+ (opto IN+)
10	IN 3- (opto IN-)
11	OUT 3 (open drain)
12	OUT 0 (open drain)
	Shielding

Hirose Connector

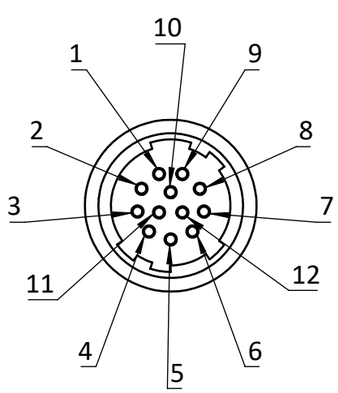

DETAIL A
MAßSTAB 2 : 1

top view

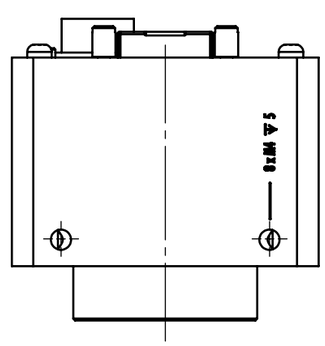

SVS-VISTEK

all dimensions in mm unless otherwise specified

Scale: 1:1

Rev.: 1

Customer Interface Drawing

	Name	Sign.	Date
Drawn	S.Seiler		03.11.2021
Checked			

Title: EXO174_183_148_428_429_540_541_542_546_547 xGE POE

Material:

Material No.:

A3

Weight:

Blatt / Sheet 1 / 1