bottom view

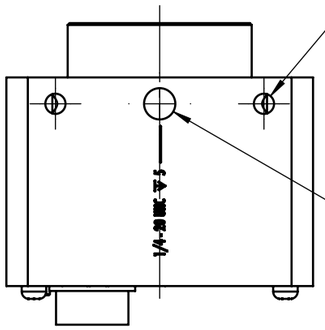

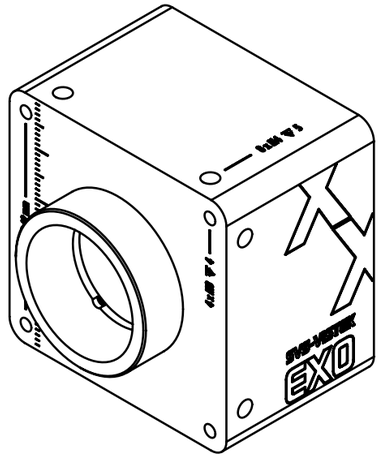

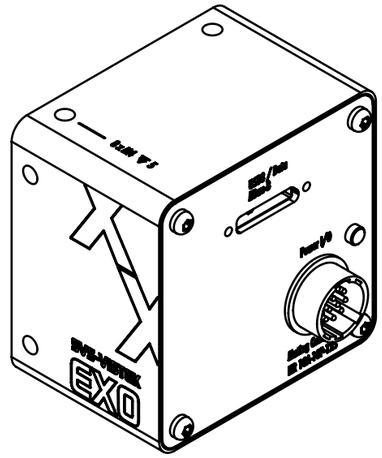

right view

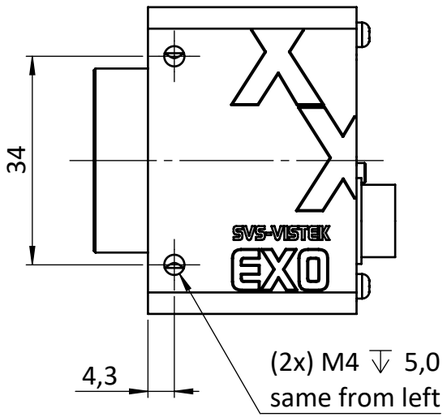

front view

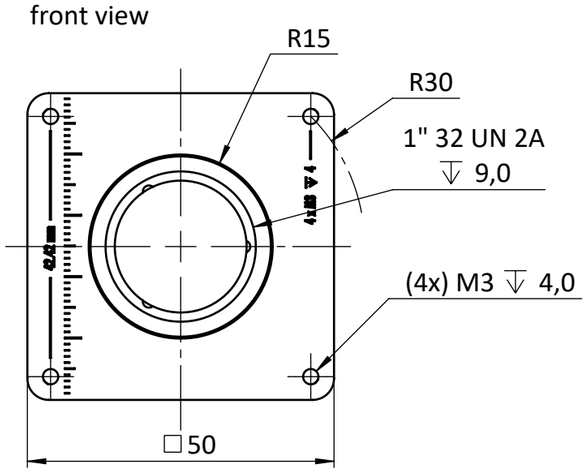

left view

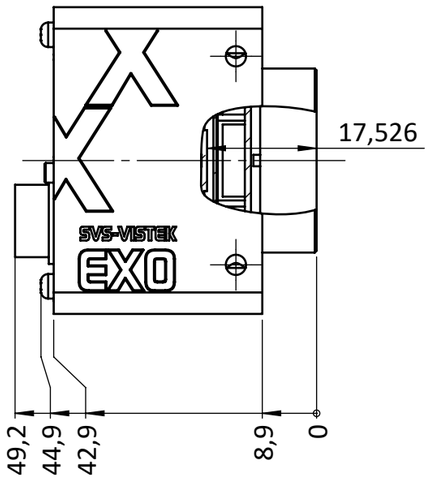

back view

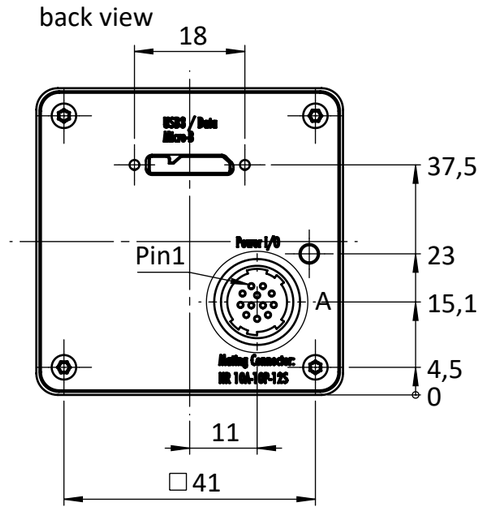

top view

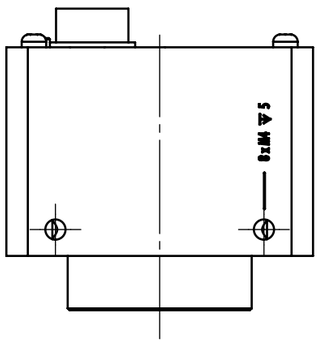

Hirose Connector

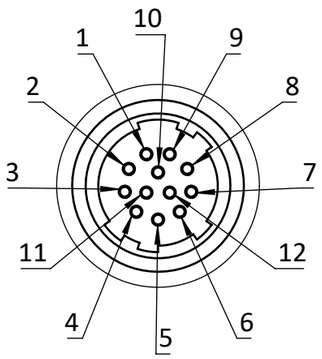

DETAIL A
MAßSTAB 2 : 1

Pin	Fn	Type
1	V In-	GND
2	V In+	10-25VDC
3	In 4	RxD RS232
4	Out 4	TxD RS232
5	In 1	0-24V
6	In 2	0-24V
7	Out 1	open drain
8	Out 2	open drain
9	In3+	opto In+
10	In3-	opto In-
11	Out 3	open drain
12	Out 0	open drain

NOTICE:
The sensor distance 17,526 mm is compensated
for cover glass thickness
distance to cover glass = 10,7mm
distance to mounting ring = 9,2mm

drawing applies to mono and color cameras
EXO174xU3
EXO183xU3
EXO249xU3
EXO428xU3
EXO540xU3
EXO541xU3

SVS-VISTEK

all dimensions in mm unless otherwise specified

Scale: 1:1 | Rev.: 1

Customer Interface Drawing

	Name	Sign.	Date
Drawn	S.Seiler		19.05.2020
Checked			

Title:
EXO174_183_149_428_540_541xU3

Material:

Material No.:

A3

Weight:

Blatt / Sheet 1 / 1